CENNTRO

Spare Parts Catalogue

Cenntro Smart Manufacturing Tech Co., Ltd

Catalogue

一、**Body and Interior**

二、**Chasis**

三、**Electrical Systems**

Body

Cab Structure

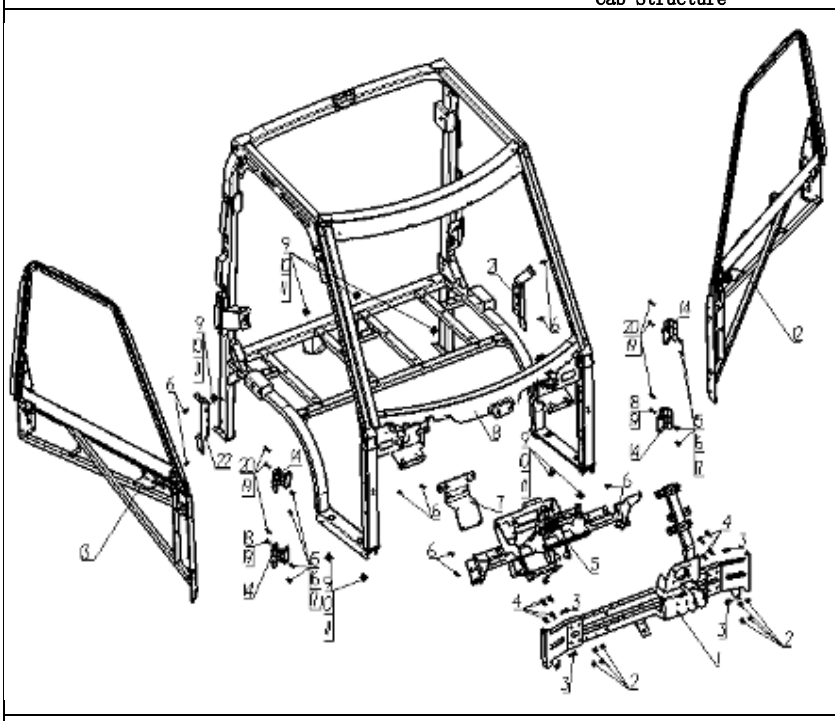

NO.	Part No.	Description	QTY/car
1	1001030405320000	Front girder assembly	1
2	1001050104020080	hexagonal flange nut	8
3	1001050104010100	hexagonal head flange bolt	4
4	1001050104110040	hexagonal head flange bolt	8
5	1001030406210000	Instrument beam assembly	1
6	1001050104010600	hexagonal head flange bolt	8
7	1001030301120030	Three-in-one control module bracket	1
8	1001030405250000	Cab structure assembly	1
9	1001050104110030	hexagonal head bolt	8
10	1001050104070020	Spring Washer	8
11	1001050104040040	Flat Washer	8
12	1001030301140010	Left door structure assembly	1
13	1001030301140020	Right door structure assembly	1
14	1001030203100000	Door hinge	4
15	1001050104011200	hexagonal head bolt	8
16	1001050104070040	Spring Washer	8
17	1001050104040070	Flat Washer	8
18	1001050104110110	hexagonal head flange bolt	2
19	1001050104070030	Spring Washer	8
20	1001050104110100	hexagonal head flange bolt	6
21	1001030301130020	Left assembly of front and bottom bracket for side panel of container	1
22	1001030301130030	Right assembly of front and bottom bracket for side panel of container	1

Cab Cover Accessories

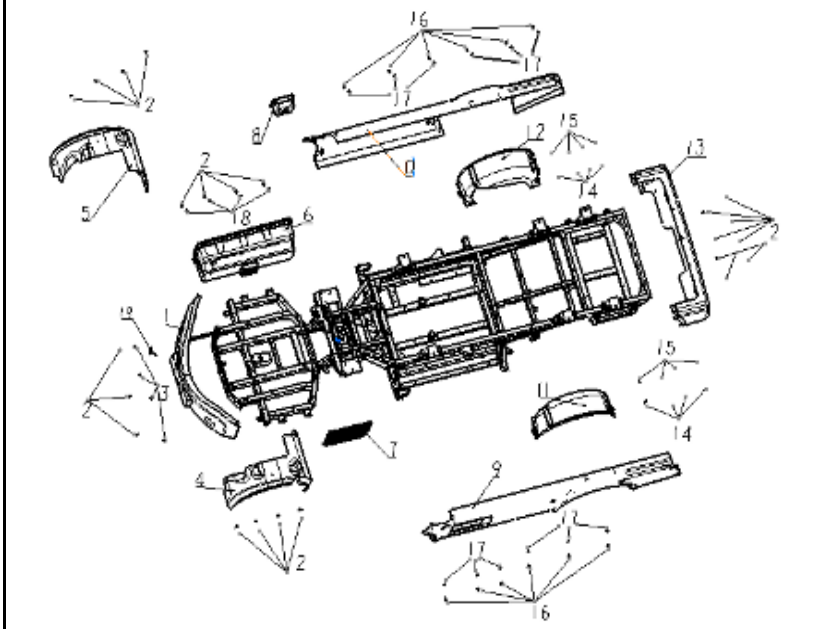

NO.	Part No.	Description	QTY/car
1	1007030401020010	Front bumper body	1
2	1001050104020030	B-type leaf spring nut	4
3	1001050104010600	hexagonal head flange bolt	23
4	1001030403040013	Left front wheel fender	1
5	1001030403040023	right front wheel fender	1
6	1001030301020020	Electrical box on right side of frame	1
7	1001030202060010	Window shades	1
8	1007030301010000	Charging Cap Assembly	1
9	1001030405270050	Apron of left frame	1
10	1001030405270070	Apron of right frame	1
11	1001030403040030	wheel housing Left	1
12	1001030403040040	wheel housing right	1
13	1001030400910010	Rear bumper	1
14	1001050104040060	Large washer	8
15	1001050104060030	Core rivet	8
16	1001050104040070	Large washer	12
17	1001050104140060	Hexagon socket button head screws	12
18	1001050104040070	Large washer	4
19	1001030401070020	Trailer blockage	1

Cab interior and exterior parts

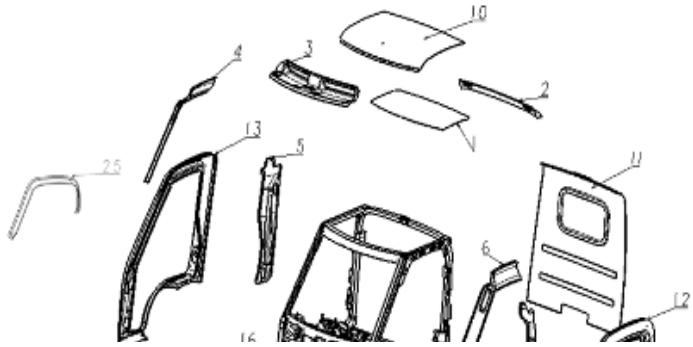

NO.	Part No.	Description	QTY/car
1	1001030405270063	Roof plate	1
2	1001030404110020	Roof mounting plate	1
3	1001030404110010	Roof savings box	1
4	1001030404100020	A pillar veneer right	1
5	1001030404100040	B pillar veneer right	1
6	1001030404100010	A pillar veneer left	1
7	1001030404100030	B pillar veneer left	1
8	1001030405210023	Front Decorative Lining	1
9	1001030405270033	firewall	1
10	1001030404060010	cover	1
11	1001030404070020	rear fender	1
12	1001030405090010	Doorframe left	1
13	1001030405100010	Doorframe right	1
14	1001030405140010	Headlight Cover right	1
15	1001030405130010	Headlight Cover left	1
16	1001030405120010	Logo Installation Board	1
17	1001030405210010	Front bin cover plate	1

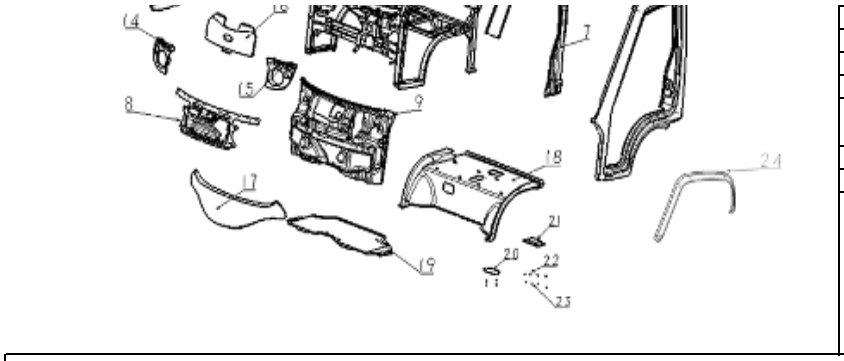

18	1001030405230033	Floor under seat	1
19	1001030405270043	Floor under seat	1
20	1001030405200010	Cab Seat Floor Cap	1
21	1001030405230043	ECU cap	1
22	1001050104011050	Philips pan head tapping screws	6
23	1001050104040210	Flat Washer	6
24	1001030405150010	Rain Cover Left(white)	1
25	1001030405160010	Rain Cover Right(white)	1

Dash Board

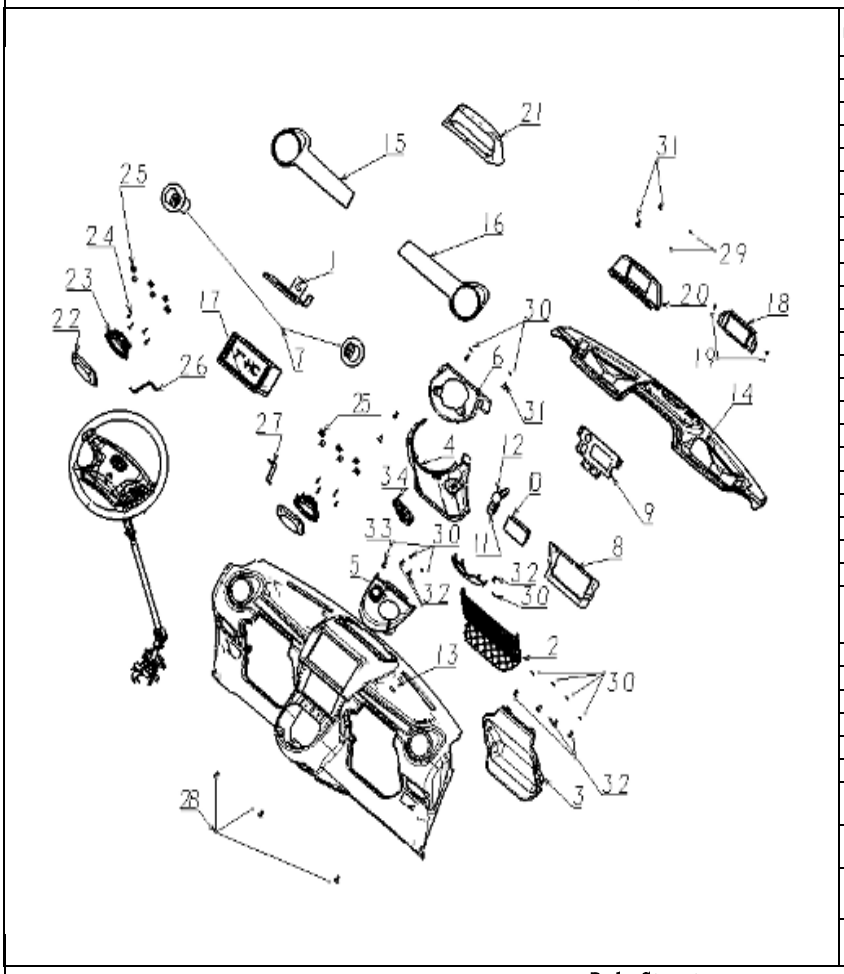

NO.	Part No.	Description	QTY/car
1	1001050203630010	MP5 bracket	1
2	1001030306010010	Net pocket	1
3	1001030406070010	Net pocket install plate	1
4	1001030406030010	Directional string cover plate	1
5	1001050204150000	Cup holder assembly	1
6	1001030406040030	Protective cover of combined	1
7	1001040401030010	Air outlet	2
8	1001050204990050	Outer frame of switch panel	1
9	1001030406080020	Air conditioning switch panel	1
10	1001040401080060	Air conditioning control panel	1
11	1001040904040010	Warning light switch	1
12	1001040905030020	12v power supply	1
13	1001030406120040	Dash board body	1
14	1001030406120033	Dashboard housing	1
15	1001030406090010	Instrument Desk Decoration	1
16	1001030406100010	Instrument Desk Decoration	1
17	1001040501010030	MP5 Player	1
18	1001040101020020	instrument	1
19	1001050104010250	Philips Pan Head Screw	4
20	1001030406060010	Instrument inner board	1
21	1001050204990040	Instrument cover	1
22	1001050204990020	Loudspeaker cover	2
23	1001040502020010	Loudspeaker	2
24	1001050104011050	Philips pan head tapping screws	8
25	1001050104010010	Plastic clip	12
26	1001050203240010	S bracket left	1
27	1001050203250010	S bracket right	1
28	1001050104010600	hexagonal head flange bolt	3
29	1001050104040180	flat washer	2
30	1001050104040210	flat washer	10
31	1001050104011060	Philips pan head tapping screws	4
32	1001050104011050	Philips pan head tapping screws	7
33	1001050104140020	Philips pan head tapping screws	1
34	1001050203720010	Electric door lock	1

Body Structure

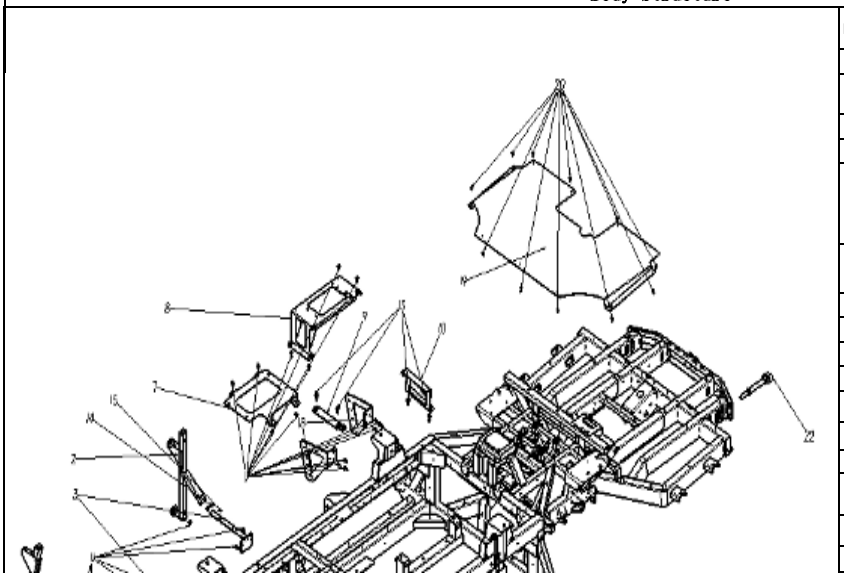

NO.	Part No.	Description	QTY/car
1	1001030301110000	Right electrical box bracket	1
2	1001030301060000	Side mid-perimeter bracket	2
3	1001050203150010	Rear wheel housing bracket	4
4	1001050203602000	Motor elastic support 2	1
5	1001050203140010 1001050203160010	After apron bracket L After apron bracket R	1
6	1001050203210010 1001050203220010	Apron bracket L Apron bracket R	1
7	1001030301170010	Charger Bracket	1
8	1001050203430030	DC mounting bracket	1
9	1001050203480030	9635 controller base B1	1
10	1001050203490030	9635 controller base B2	1
11	1001050104010600	hexagonal head flange bolt	34
12	1001050203750010		2
13	1001050104010100	hexagonal head flange bolt	5
14	1001050104010950	hexagonal head flange bolt	2
15	1001050104020070	hexagonal flange nut	2
16	1001050104010320	hexagonal head bolt	2

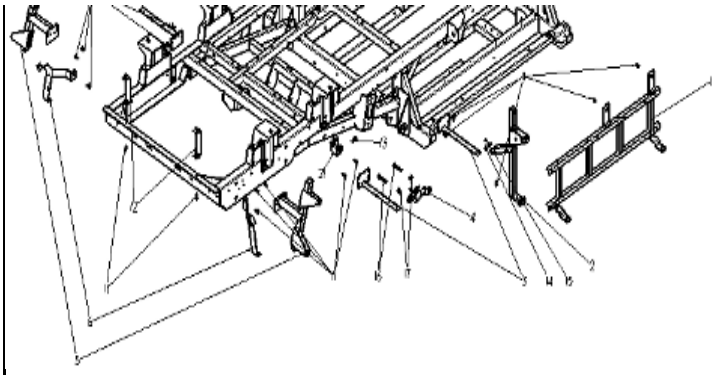

17	1001050104020080	hexagonal flange nut	2
18	1001040401070070 1001040401070080	Front bracket of condenser Condenser rear bracket	1
19	1001030301130010	Aluminum floor	1
20	1001050104010740	Round-end drill screw	11
21	1001050203601000	Motor elastic support 1	1
22	1001010201010130	Traction hook	1

Covering Parts

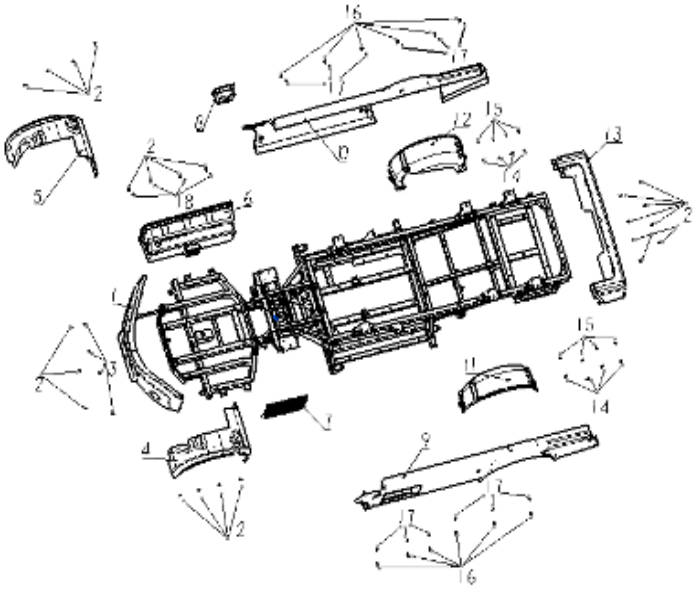

NO.	Part No.	Description	QTY/car
1	1007030401020010	Front bumper body	1
2	1001050104020030	B-type leaf spring nut	4
3	1001050104010600	hexagonal head flange bolt	23
4	1001030403040013	Left front wheel fender	1
5	1001030403040023	right front wheel fender	1
6	1001030301020020	Electrical box on right side of	1
7	1001030202060010	Window shades	1
8	1007030301010000	Charging Cap Assembly	1
9	1001030405270050	Apron of left frame	1
10	1001030405270070	Apron of right frame	1
11	1001030403040030	wheel housing Left	1
12	1001030403040040	wheel housing right	1
13	1001030400910010	Rear bumper	1
14	1001050104040060	Large washer	8
15	1001050104060030	Core rivet	8
16	1001050104040070	Large washer	12
17	1001050104140060	Hexagon socket button head screws	12
18	1001050104040070	Large washer	4

Left door assembly

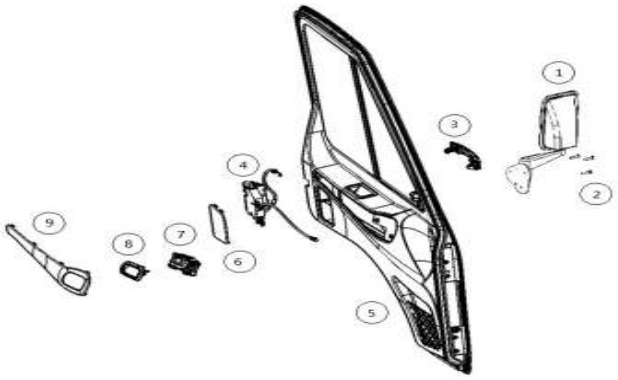

NO.	Part No.	Description	QTY/car
1	/	Rearview mirror	1
2	1001050104010270	Philips Pan Head Screw	3
3	1001030204100000	Left door handle assembly	1
4	1001030204020010	Left door lock	1
5	1001030203010000	Left door assembly	1
6	1001030203010060	Left door inner cover	1
7	1001030204060010	Left internal handle	1
8	1001030203050010	Left inner pull hood	1
9	1001030203010040	Left inner hand decorative plate	1

Right door assembly

NO.	Part No.	Description	QTY/car
1	/	Rearview mirror	1
2	1001050104010270	Philips Pan Head Screw	3
3	1001030204110000	Right door handle assembly	1

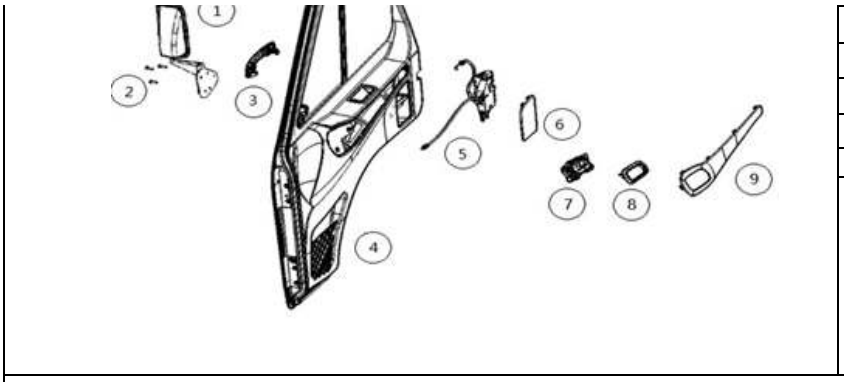

4	1001030203020000	Right door assembly	1
5	1001030204010010	Right door lock	1
6	1001030203020060	Right door inner cover	1
7	1001030204070010	Right internal handle	1
8	1001030203060010	Right inner pull hood	1
9	1001030203020040	Right inner hand decorative plate	1

Cab/co-pilot seat assembly

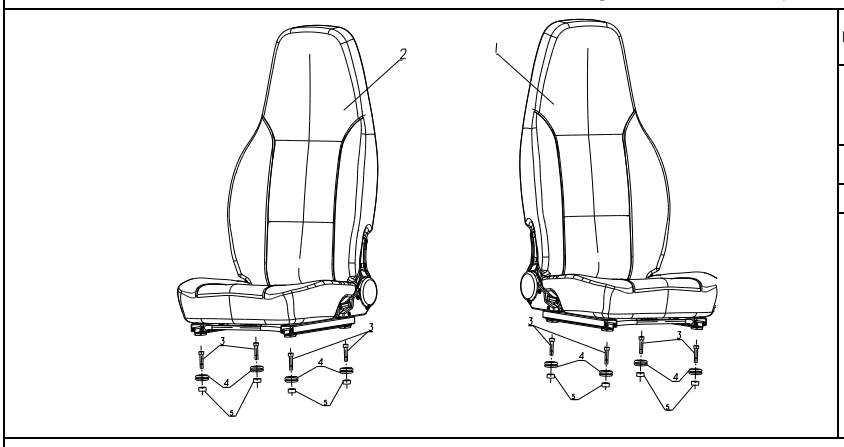

NO.	Part No.	Description	QTY/car
1	1001030504040030	Driver's seat assembly	1
2	1001030504040040	Vice driving seat assembly	1
3	1001050104010160	hexagon socket cap screws	8
4	1001050205990070	Rubber ring	8
5	1001050104050030	Metal pipe	8

Safety belt reel assembly DOT version

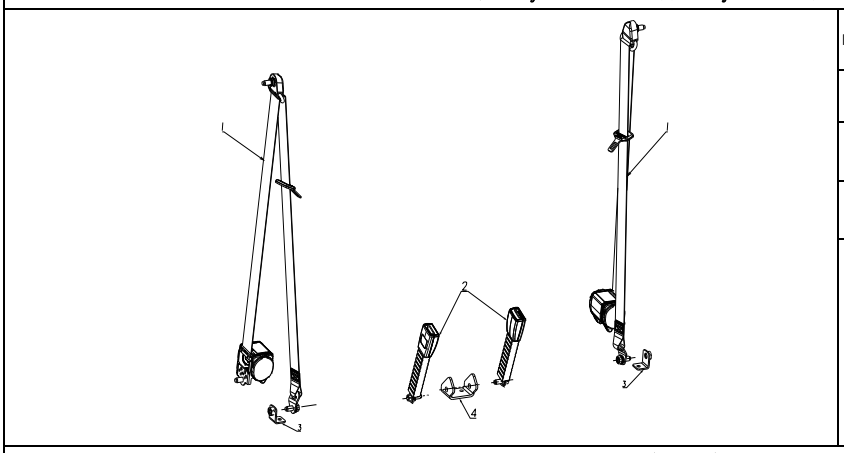

NO.	Part No.	Description	QTY/car
1	1001050203700010	Safety belt assembly DOT version	2
2	1001050203710010	Woven belt locking assembly	2
3	1001030405240020	Safety belt fastening bracket	2
4	1001030405240010	Seatbelt lock bracket	1

Windshield

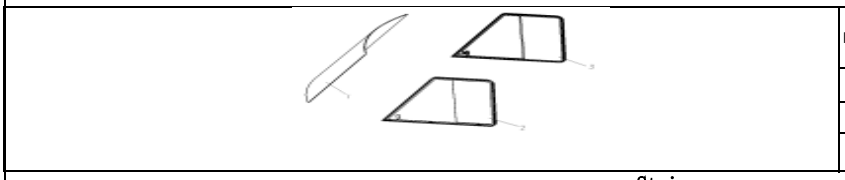

NO.	Part No.	Description	QTY/car
1	1001030202010010	Front windshield	1
2	1001030202040000	Left window glass	1
3	1001030202050000	Right window glass	1

Strip

NO.	Part No.	Description	QTY/car
1	1001050205990270	Left door rubber seal strip	1
2	1001050205990280	Right door rubber seal strip	1
3	1001050205990040	Side door frame adhesive tape	2
4	1001050205990020	Body side storage box adhesive tape	1

	5	1001050205990220	Front windshield adhesive tape	1

十三、内饰 Interior decoration

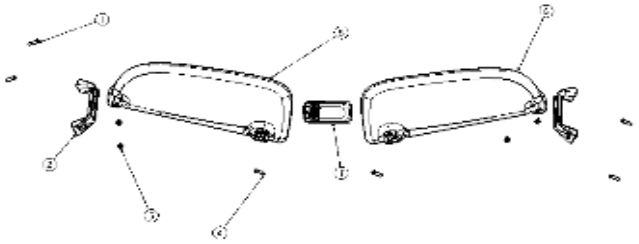

NO.	Part No.	Description	QTY/car
1	1001050104010210	Philips Pan Head Screw	4
2	1001050204990080	handrail	2
3	1001050104010740	Round head drill tail screw	4
4	1001050104011050	Philips pan head tapping screws	2
5	1001030102010010	Left sunshade	1
6	1001030102020010	Right sunshade	1
7	1001040806020010	Reading light	1

Rearview mirror assembly

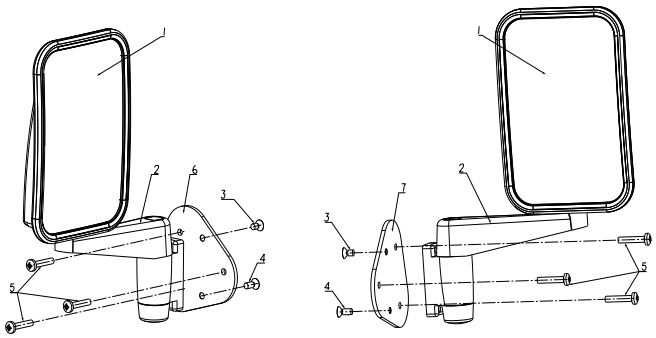

NO.	Part No.	Description	QTY/car
1	1001030101030020	Rearview mirror lens	2
2	1001030101030010	Rearview mirror rocker arm	2
3	1001050104010170	Philips Countersunk Head Screw	2
4	1001050104011110	Philips Countersunk Head Screw	2
5	1001050104010270	Philips Pan Head Screw	6
6	1001050203390010	Left Rearview mirror frame	1
7	1001050203400010	Right Rearview mirror frame	1

Wiper assembly

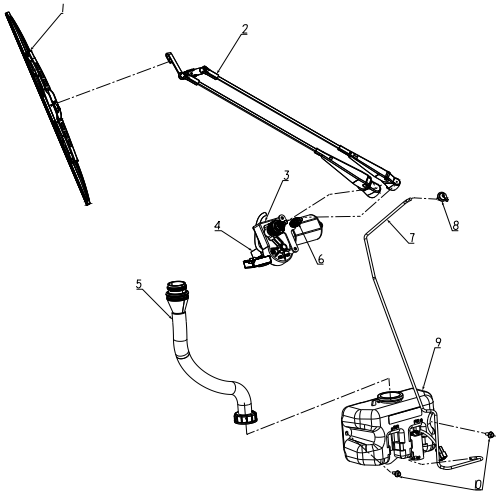

序号	Part No.	Description	QTY/car
1	1001040702010020	Wiper Blade	1
2	1001040702040010	Wiper Arm	1
3	1001040701080020	Windshield Wiper Motor	1
4	1001040701080010	wiper control relay	1
5	1001040799050020	Water hose for washing pot	1
6	1001050104020090	hexagonal flange nut	1
7	1001040799020010	Washing pot hose	1
8	1001040701030010	Right angle bend	1
9	1001040799050010	Main body of washing pot	1
10	1001050104010600	hexagonal head flange bolt	2

Chasis

Wheel assembly

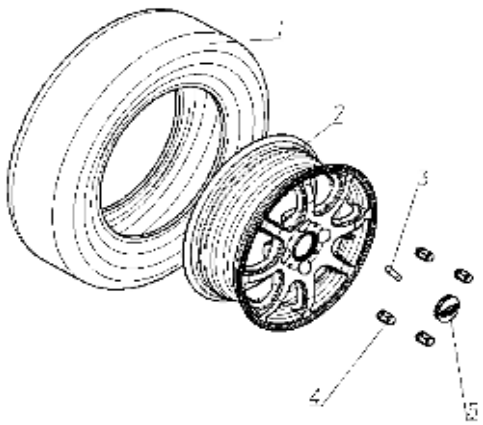

NO.	Part No.	Description	QTY/car
1	1001010104010020	Tire 175/65R14 86H	1
2	1001010104010010	Tire 175/65R14 82H	1
3	1001010101020010	Wheel rim	1
4	1001010107010010	Wheel Valve	1
5	1001050104020010	Wheelnut	4
6	1001050204990010	Wheel Cover	1

Driving System

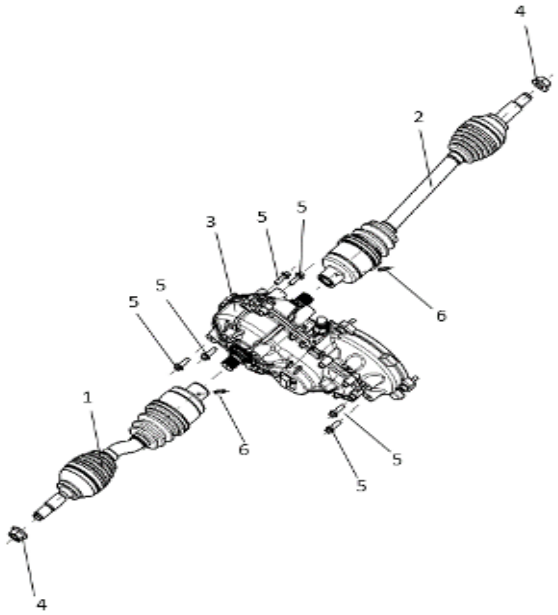

NO.	Part No.	Description	QTY/car
1	1001020101030010	Transmission Axle I	1
2	1001020101030020	Transmission Axle II	1
3	1001020103010000	Gear Box	1
4	1001050104020210	Rear Shaft Lock Nut	2
5	1001050104011120	Serrated Flange Bolt	6
6	1001050104050060	Cotter Pin	2

Front suspension assembly

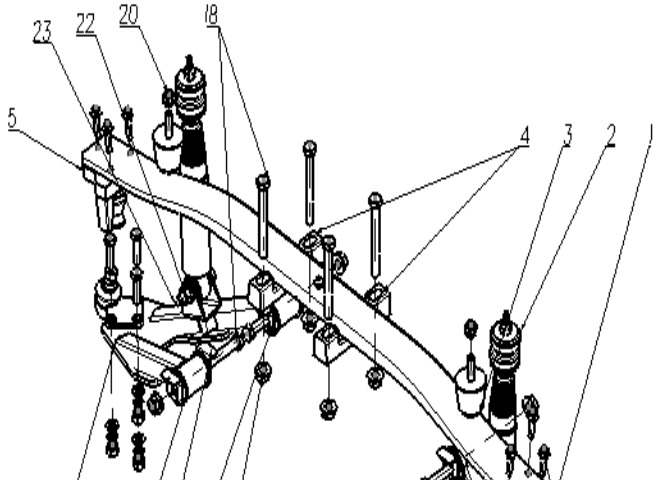

NO.	Part No.	Description	QTY/car
1	1001010301010010	Band spring	1
2	1001010302010020	Front Shock Absorber	2
3	1001010302030010	Damping rubber block	2
4	1001010301040010	Leaf Spring Mounting Bracket	2
5	1001010301030010	Left steel plate spring support	1
6	1001010301020010	Right steel plate spring support	1
7	1001010503020010	Leaf Spring Ball Joint	2
8	1001010202030010	Front suspension rocker arm (left)	1
9	1001010202040010	Front suspension rocker arm (right)	1
10	1001010202010010	Front Joint Bushing	8

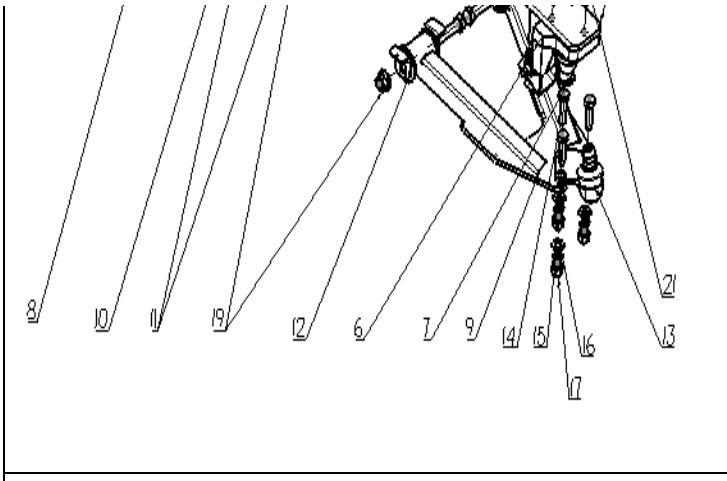

11	1001010202060010	Front A-Arm Spacer 1	4
12	1001010202060020	Front A-Arm Spacer 2	4
13	1001010503010010	A-Arm BALL JOINT	2
14	1001050104011130	hexagonal head bolt	6
15	1001050104040250	spring washer	6
16	1001050104040250	Flat Washer	6
17	1001050104020050	hexagonal locking nut with non-metallic inserts	6
18	1001050104010510	hexagonal head bolt	8
19	1001050104020390	Serrated Flange nut	8
20	1001050104020290	All-metal insert hexagon-lock nut	2
21	1001050104011380	hexagonal head flange bolt	6
22	1001050104020100	Serrated Flange nut	2

Rear rocker arm assembly

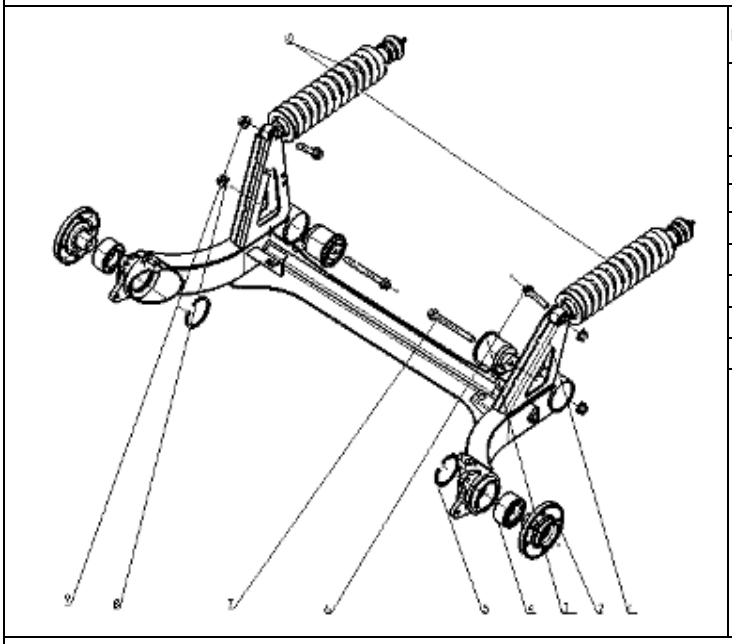

NO.	Part No.	Description	QTY/car
1	1001010202070000	Rear Swing Arm Assembly	1
2	1001010102010010	Rear Wheel	2
3	1001010202020010	Rear Axle Bushing	2
4	1001010103010010	Rear Wheel Bearing	2
5	1001050104040190	circlip for hole	2
6	1001050104010690	hexagonal head flange bolt	2
7	1001050104010940	hexagonal head flange bolt	2
8	1001050104020390	Serrated Flange nut	2
9	1001050104020100	Serrated Flange nut	2
10	1001010302080010	Rear Shock Absorber	2

Steering system

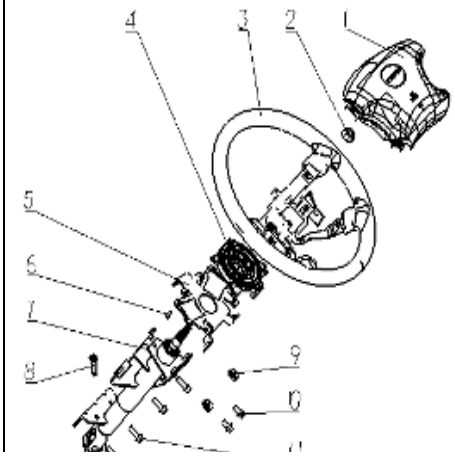

NO.	Part No.	Description	QTY/car
1	1001010502030020	Driver AirBag module（JONWAY Logo）	1
	1001010502030050	Driver AirBag module（CENNTRO Logo）	1
2	/	Serrated Flange nut	1
3	1001010502030010	Steering Wheel	1
4	1001010502030030	Clock spring	1
5	1001030406150010	Switch Bracket	1
6	1001050104140020	Philips pan head tapping screws	2
7	1001010505120010	Steering Column	1
8	1001050104110050	hexagonal head bolt with spring washer	1
9	1001050104010010	Plastic clip	2
10	1001050104010390	hexagonal head flange bolt	2
11	1001050104010100	hexagonal head flange bolt	4
12	1001010505020010	Steering Column Lower Shaft	1
13	1001050104010360	hexagonal head bolt	2
14	1001050104110050	hexagonal head bolt with spring washer	1
15	1001050104040050	Flat Washer	4
16	1001010506010010	Steering Bevel Box	1

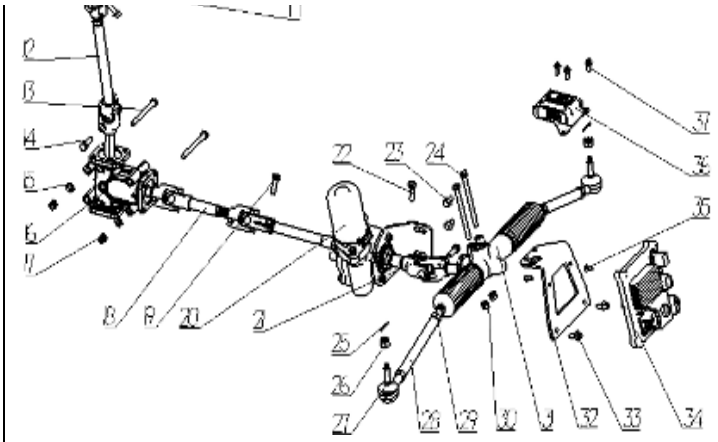

17	1001050104020040	Type 2 hexagonal locking nut with non-metallic inserts	4
18	1001010505060010	EPS Steering Drive Axle Assembly	1
19	1001050104110050	hexagonal head bolt with spring washer	3
20	1001010501030000	EPS REDUCER ASSEMBLY(Electric Power	1
21	1001010505070010	Cardan Joint Assembly	1
22	1001050104110050	hexagonal head bolt with spring washer	2
23	1001050104010980	Serrated Flange Bolt	6
24	1001050104010450	hexagonal head flange bolt	2
25	1001050104050080	Cotter Pin	2
26	/	I-type Hexagon Slotted Nut	2
27	1001010506021020	Outer ball pin	2
28	1001010506021040	Tie rod	2
29	1001010506021030	Link locknut	2
30	1001050104020040	Type 2 hexagonal locking nut with non-metallic inserts	2
31	1001010506021010	Steering Rack Body	1
32	1001050203070020	Steering Mounting Bracket	1
33	1001050104010390	hexagonal head flange bolt	2
34	1001040301040020	EPS Controller	1
35	1001050104011110	Phillips Countersunk Head Screw	2
36	1001010502030040	Electronic control unit (ecu)	1
37	1001050104010600	hexagonal head flange bolt	3

Brake fluid reservoir and Brake main cylinder

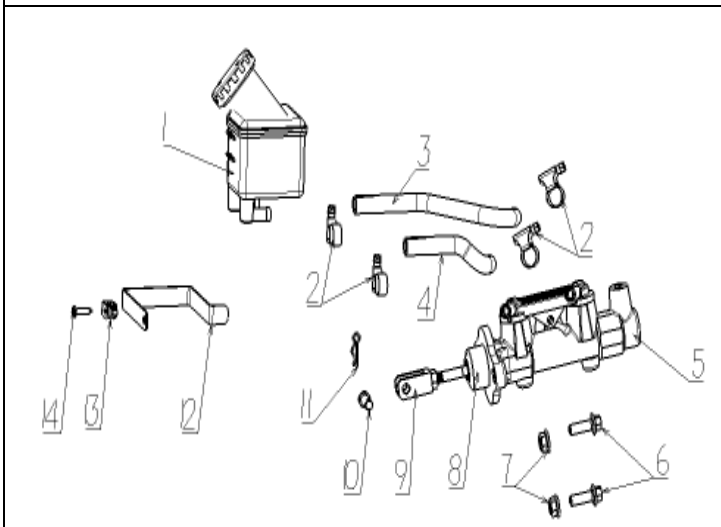

NO.	Part No.	Description	QTY/car
1	1001010406170020	Brake Fluid Reservoir (two feets)	1
2	1001050104030010	Hose Clamp	4
3	1001010406760020	Brake master cylinder Type I oil intake hose	1
4	1001010406760010	Brake master cylinder Type II oil intake hose	1
5	1001010406330010-1	Brake master cylinder body	1
6	1001050104010100	hexagonal head flange bolt	2
7	1001050104020040	Type 2 hexagonal locking nut with non-metallic inserts	2
8	1001010406330010-2	Cover	1
9	1001010406330010-3	Push rod	1
10	1001050104050040	Lock PinΦ8	1
11	1001050104050010	Shaft Pin8×22	1
12	1001050203010010	Brake Fluid Reservoir bracket	1
13	1001050104010010	Plastic clip	1
14	1001050104010310	Phillips pan head tapping screws	1
15	1001010406330010	Master Cylinder	1

ABS module and part of hydraulic pipe

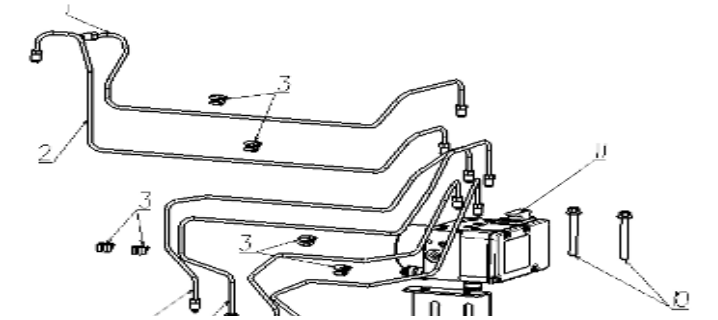

NO.	Part No.	Description	QTY/car
1	1001010406760090	Brake master cylinder Type I oil outake hose	1
2	1001010406760100	Brake master cylinder Type II oil outake hose	1
3	1001050104030020	Brake Line Clip	6
4	1001010406850070	Left Rear Wheel Brake Line, Type I	1
5	1001010406850030	Left Front Brake Line,Type I	1
6	1001010406850100	Right Rear Wheel Brake Line Type I	1
7	1001010406850050	Right Front Brake Line,	1
8	1001050104110080	hexagonal head flange bolt	2
9	1001010401010020	ABS fixation bracket	1
10	1001050104010060	hexagonal head flange bolt	2

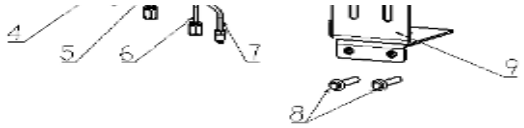

11	1001010401010010	ABS Module	1

Front and rear hydraulic pipe

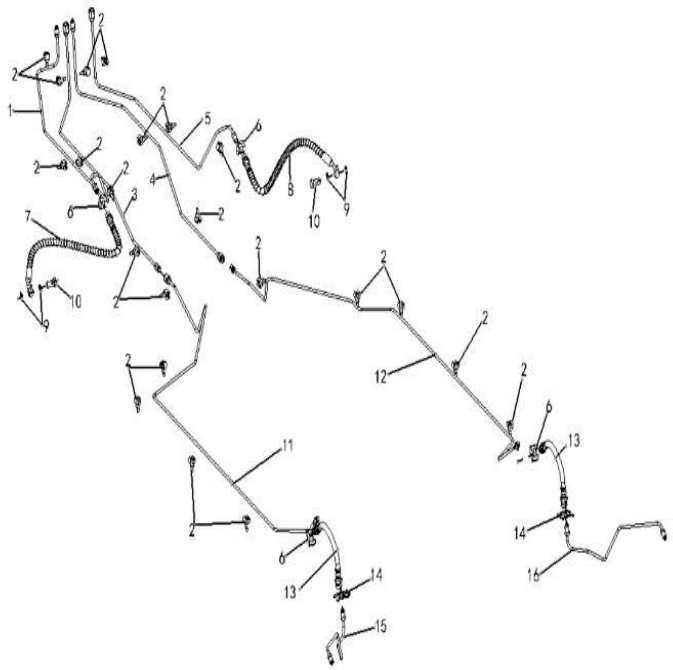

NO.	Part No.	Description	QTY/car
1	1001010406850040	Left Front Brake Line，Type II	1
2	1001050104030020	Brake Line Clip	26
3	1001010406850080	Left Rear Wheel Brake Line,Type II	1
4	1001010406850110	Right Rear Wheel Brake Line,Type II	1
5	1001010406850060	Right Front Brake Line, Type II	1
6	1001050104030060	Elastic Clip	4
7	1001010406400010	Left Front Brake Hose	1
8	1001010406440010	Right Front Brake Hose	1
9	1001050104040150	Copper Washer	4
10	1001050104010490	Hollow Screw M10	2
11	1001010406850090	Left Rear Wheel Brake Line,Type III	1
12	1001010406850120	Right Rear Wheel Brake Line,Type III	1
13	1001010406030010	Rear Brake Hose	2
14	1001050104040100	E CLIP	2
15	1001010406770090	Left Rear Wheel Brake Line	1
16	1001010406770100	Right Rear Wheel Brake Line	1

Front brake and wheel speed sensor

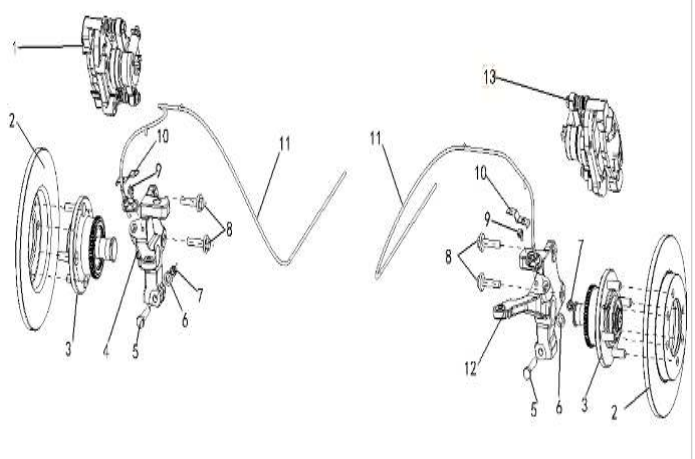

NO.	Part No.	Description	QTY/car
1	1001010406580000	Front left brake caliper with friction block assembly	1
2	1001010404020010	Front brake disc	2
3	/	Front wheel rim	2
4	1001010505130010	Front left steering knuckle	1
5	1001050104010340	hexagonal head bolt	2
6	1001050104040040	Flat Washer	2
7	1001050104020050	hexagonal locking nut with non-metallic inserts	2
8	/	Clamp retaining bolt	4
9	1001050104010600	hexagonal head flange bolt	2
10	1001010401020030	Front wheel speed sensor bracket	2
11	1001010401020010	Front wheel speed sensor assembly	2
12	1001010505130020	Front right steering knuckle	1
13	1001010406590000	Front right brake caliper with friction block assembly	1
14	1001010406840010	Left front brake assembly	1

	15	1001010406840020	Right front brake assembly	1

Rear brake and wheel speed sensor

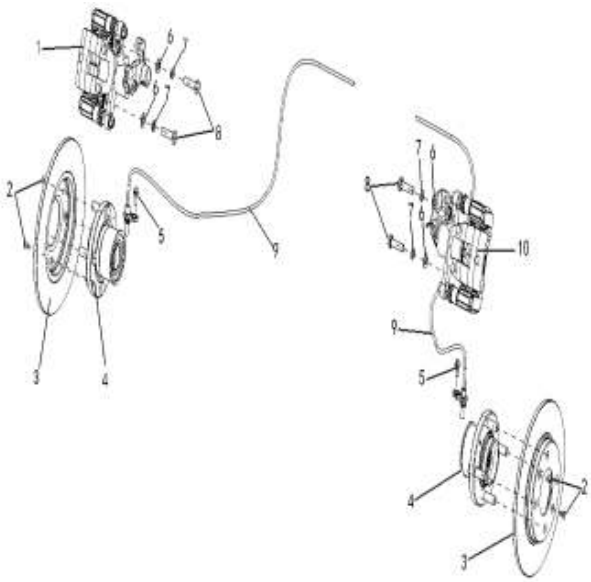

NO.	Part No.	Description	QTY/car
1	1001010406790010	Rear Left Caliper	1
2	1001050104010170	Philips Countersunk Head Screw	4
3	1001010404030010	Rear brake disc	2
4	1001010102010010	Rear Wheel	2
5	1001050104010600	hexagonal head flange bolt	2
6	1001050104040040	Flat Washer	4
7	1001050104070020	spring washer	4
8	1001050104011090	hexagonal head bolt	4
9	1001010401020020	Rear wheel speed sensor assembly	2
10	1001010406790020	Rear Right Caliper	1

Brake pedal

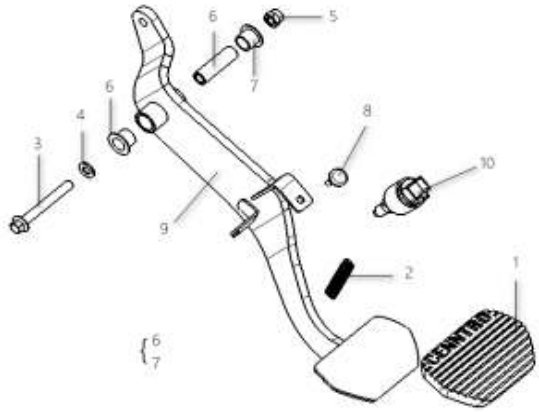

NO.	Part No.	Description	QTY/car
1	1001050205990050	Brake Pedal mat	1
2	1001050102010010	Brake Pedal Spring	1
3	1001050104010060	hexagonal head flange bolt	1
4	1001050104040050	Flat Washer	1
5	1001050104020040	Type 2 hexagonal locking nut with non-metallic inserts	1
6	1001010201060030	lining casing	2
7	/	Small lining casing	1
8	/	cushion	1
9	1001010406860010	Brake Pedal	1
10	1001040904120010	Brake switch	1

Handbrake

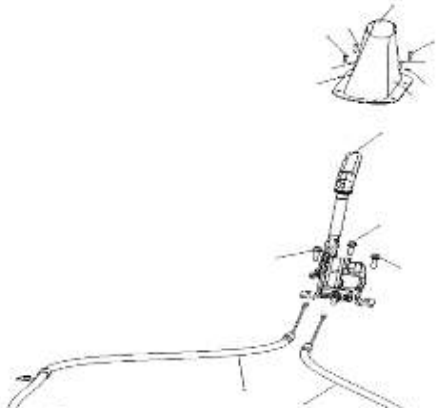

NO.	Part No.	Description	QTY/car
1	1001010406320010	Parking brake dust cover	1
2	1001050104011050	Philips pan head tapping screws	4
3	1001050104040210	Flat Washer	4
4	1001010406190000	Parking Brake	1
5	1001050104010100	hexagonal head flange bolt	3
6	1001010406780010	Rear Left Parking Brake Cable	1
7	1001010406780020	Rear Right Parking Brake Cable	1
8	1001050104010600	hexagonal head flange bolt	4
9	1001050104010030	hexagonal head flange bolt	2

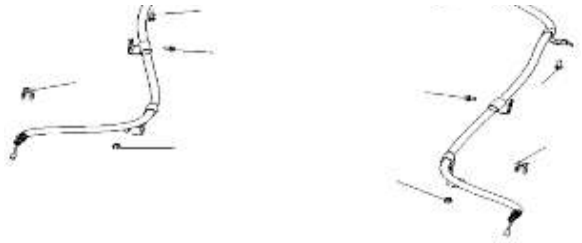	10	1001010406810010	Brake Line/Hose Metal Clip	2

Electrical Systems

Front light

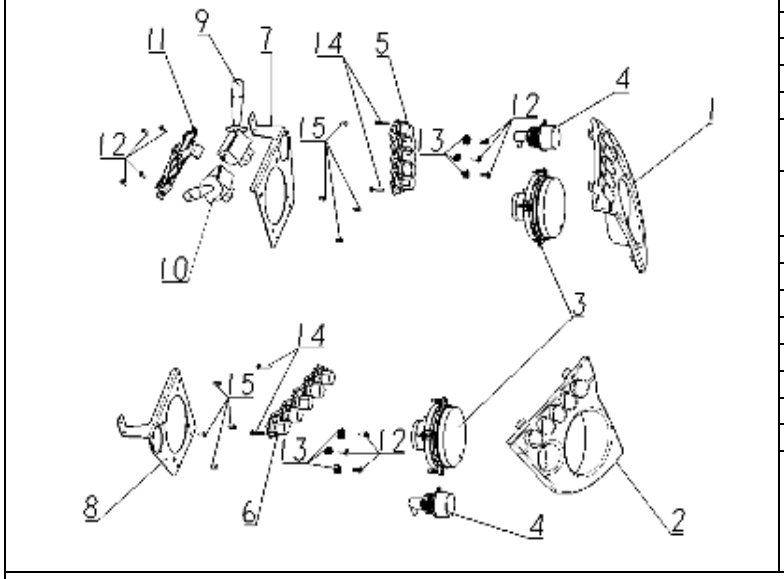

NO.	Part No.	Description	QTY/car
1	1001030405130010	Headlight Cover Left	1
2	1001030405140010	Headlight Cover Right	1
3	1001040801030010	Front headlamp 3c standard	2
4	1001040804010010	Direction Indicator Lights Front	2
5	1001040806090020	Left Running LED Light(Left front position light)	1
6	1001040806090010	Right Running LED Light(Right front position light)	1
7	1001050203050020	Headlamp Mounting Bracket, L	1
8	1001050203120020	Headlamp Mounting Bracket, R	1
9	1001040904020010	Headlight Switch	1
10	1001040904010010	Wiper switch	1
11	1001030406150010	Switch Bracket	1
12	1001050104011050	Philips pan head tapping screws	10
13	1001050104010010	Plastic clip	6
14	1001050104140040	Philips Pan Head Screw	4
15	1001050104010250	Philips Pan Head Screw	8

Rear light system

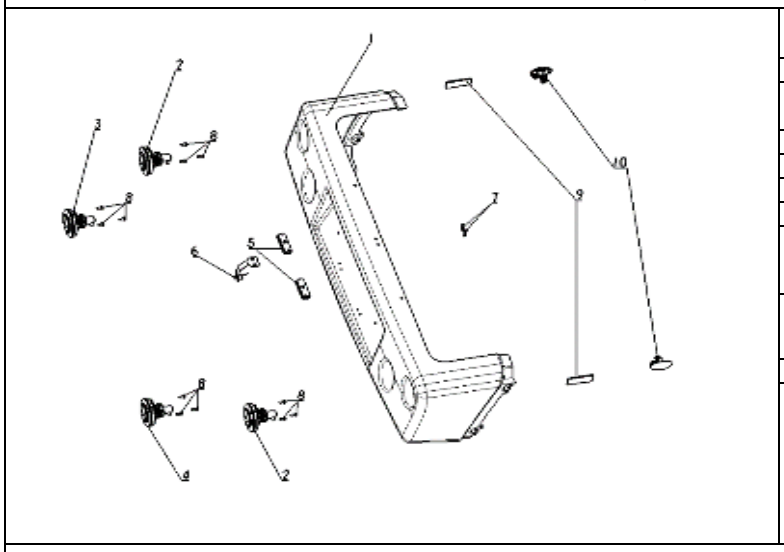

NO.	Part No.	Description	QTY/car
1	1001030400910010	Rear bumper	1
2	1001040802030010	Rear Direction Indicator/Brake Lights	2
3	1001040805030000	Reverse Light	1
4	1001040803030000	Rear Fog Light	1
5	1001040806040010	License Plate Light	1
6	1001040105010030	reverse camera (with bracket)	1
7	1001050104010210	Philips Pan Head Screw	2
8	/	Philips pan head tapping screws	12
9	1001040807010010	Side Radiator	2
10	1001040804050010	320-side turn signal	2

Air conditioning system

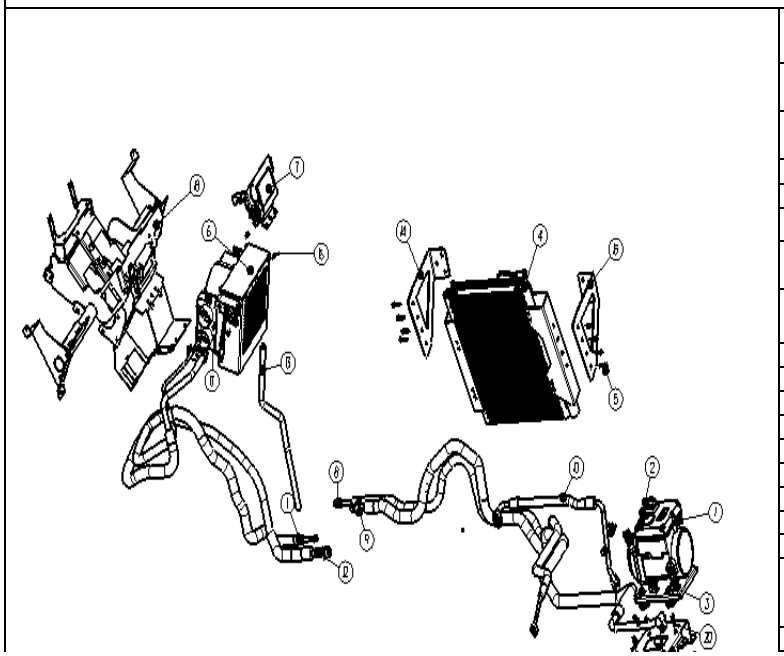

NO.	Part No.	Description	QTY/car
1	1001040401100000	Integrated air-conditioning compressor	1
2	1001040601740440	power input line of AC compressor	1
3	1001050104010320	hexagonal head bolt	4
4	1001040401070020	Air conditioning condenser	1
5	1001050104150020	hexagonal head flange bolt	8
6	1001040401130010	Air conditioning Evaporator with ptc	1
7	1001040401080060	Air conditioning control panel	1
8	1001040401120010	Condenser discharge pipe	1
9	1001040401120020	Compressor suction pipe	1
10	1001040401120030	Compressor discharge pipe	1
11	1001040401120040	Evaporator suction tube	1
12	1001040401120050	Evaporator discharge pipe	1
13	1001040401130020	Evaporator drain	1
14	1001040401070070	Condenser front bracket	1
15	1001040401070080	Condenser rear bracket	1
16	1001050104010030	hexagonal head flange bolt	4
17	/	Hexagonal head bolt, spring washer and flat washer assemblies	1
18	1001030406210000	Instrument beam assembly	1

19	/	Air conditioning compressor support	1
20	1001050104110040	hexagonal head flange bolt	4

Vehicle high-voltage system and battery communication signal

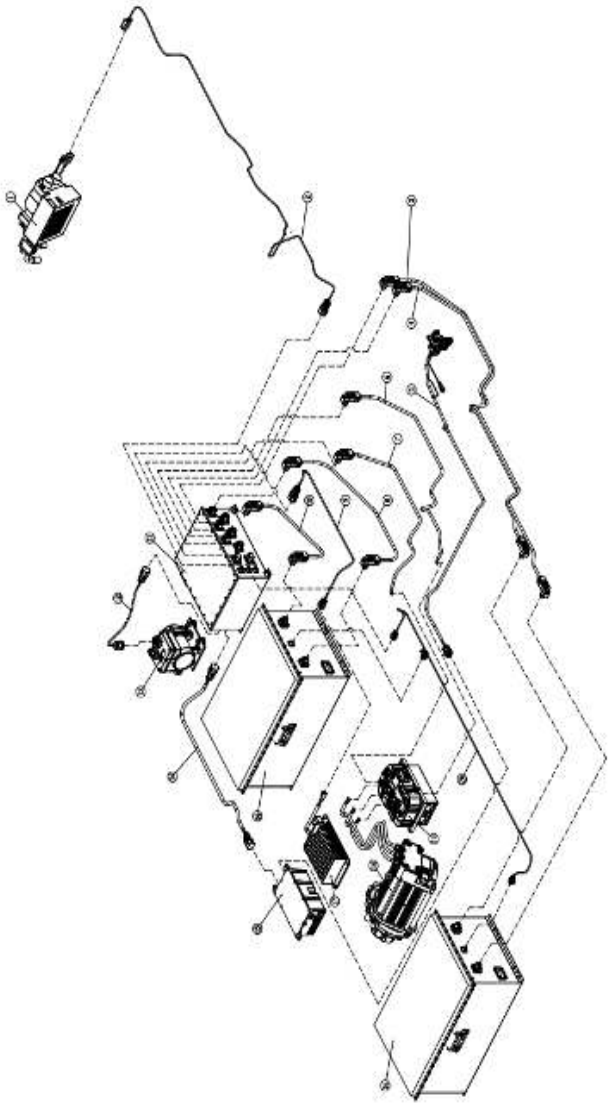

NO.	Part No.	Description	QTY/car
1	1001040401130010	Air conditioning Evaporator with ptc	1
2	1001040601740510	PTC Output line of high voltage control box	1
3	1001040601740210	Positive connection wire (rear battery box)	1
4	1001040601740220	Negative connecting wire (rear battery box)	1
5	1001040905020060	European standard charging seat	1
6	1001040601740080	Output positive line of high voltage control box	1
7	1001040601740070	Output negative line of high voltage control box	1
8	1001040601740200	Positive connection wire (front battery box)	1
9	1001040601740520	DC/DC Output line of high voltage control box	1
10	1001040601740230	Negative connection wire (front battery box)	1
11	1001040301140110	high voltage control box (two-pack three-dimensional non-heating)	1
12	1001040601740440	power input line of AC compressor	1
13	1001040401100000	Integrated air-conditioning compressor	1
14	1001040601740310	Slow charge input line of high voltage control box	1
15	1001040905160010	3.3KW Charger	1
16	1001020301140020	Power battery pack	1
17	1001040905120030	1KW DC/DC Converter	1
18	1001020301160020	Motor	1
19	1001040301160010	Motor Controller	1
20	1001040601740090	Battery box-high voltage box communication signal line	1

Power battery pack and high-voltage box

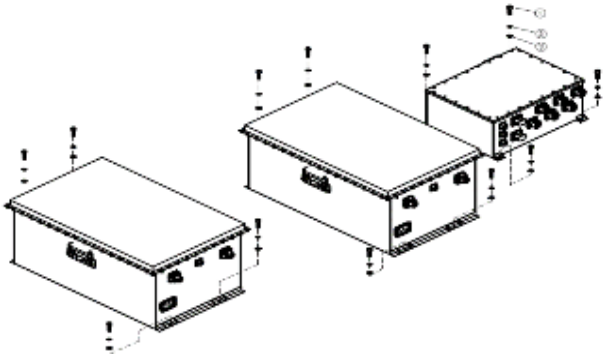

NO.	Part No.	Description	QTY/car
8-2	1001020301140020	Power battery pack	1
	1001040301140110	high voltage control box (two-pack three-dimensional non-heating)	1
1	1001050104010150	hexagon socket cap screws	12
2	1001050104070030	spring washer	12
3	1001050104040050	flat washer	12

Motor and motor controller

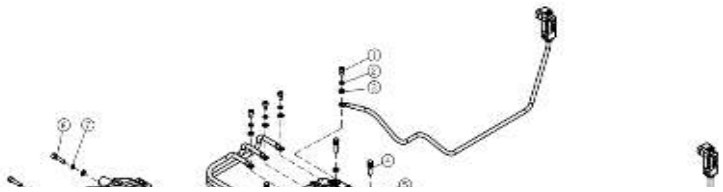

NO.	Part No.	Description	QTY/car
8-3	1001040301160010	Motor Controller	1
	1001020301160020	Motor	1
1	/	hexagon socket cap screws	5
2	/	spring washer	5
3	/	flat washer	5
4	1001050104010520	Hexagon head bolt with spring washer	4
5	1001050104040050	flat washer	8

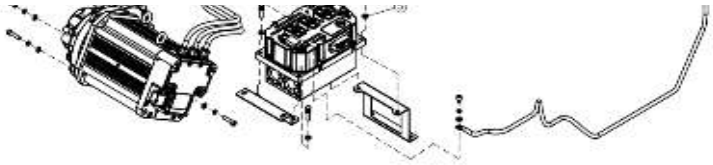

6	1001050104011080	hexagon socket cap screws	4
7	1001050104070030	spring washer	4

Charger

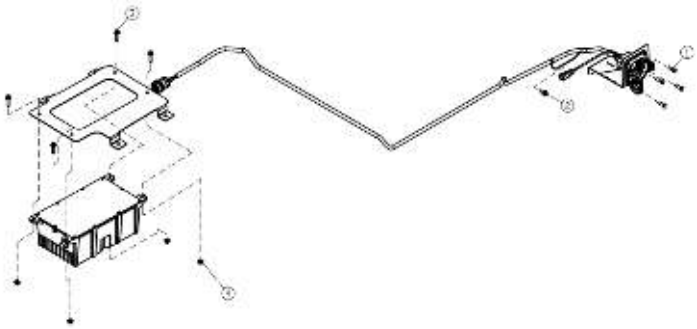

NO.	Part No.	Description	QTY/car
8-4	1001040905160010	3.3KW Charger	1
	1001040905020060	European standard charging seat	1
1	1007050104010010	Philips Countersunk Head Screw	4
2	1001050104010030	hexagonal head flange bolt	1
3	1001050104010600	Hexagon flange bolt	4
4	1001050104020070	hexagonal flange nut	4

Low-voltage wiring harness

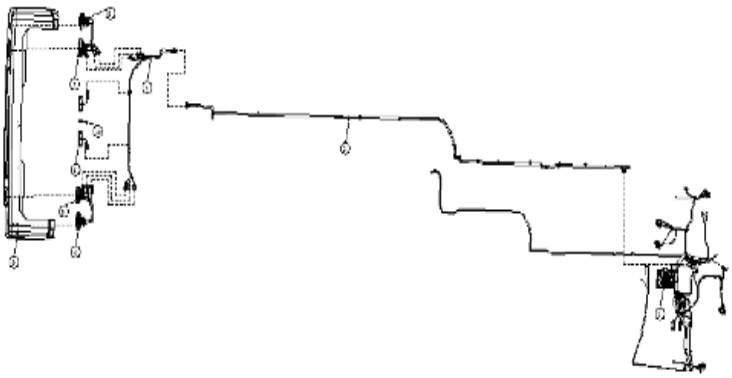

NO.	Part No.	Description	QTY/car
1	1001040601800160	Main harness of the cab (AC+ ABS+ waterproof EPS)	1
2	1001040601740290	Connect wiring harness assembly	1
3	1001040601470010	Chassis harness assembly	1
4	1001040802030010	Right Rear Direction Indicator/Brake Lights （same with the left）	1
5	1001040803030000	Rear Fog Light	1
6	1001040806040010	License Plate Light	2
7	1001040805030000	Reverse Light	1
8	1001040802030010	Left Rear Direction Indicator/Brake Lights （same with the right）	1
9	1001030400910010	Rear bumper	1
10	1001040105010030	reverse camera (with bracket)	1

Low-voltage wiring harness

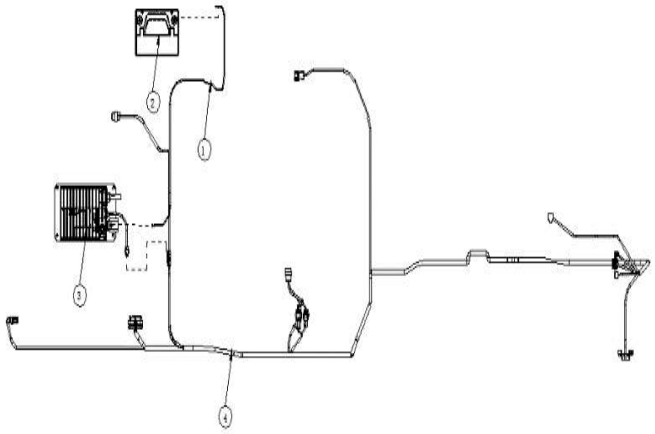

NO.	Part No.	Description	QTY/car
1	1001040601740450	DC/DC output line	1
2	1001020301200010	36ah start battery	1
3	1001040905120030	1KW DC/DC Converter	1
4	1001040601740650	Controller wiring (AC+ABS+MOTOR CONTROLLER)	1

Low-voltage wiring harness

NO.	Part No.	Description	QTY/car
1	1001040601800160	Main harness of the cab (AC+ ABS+ waterproof EPS)	1

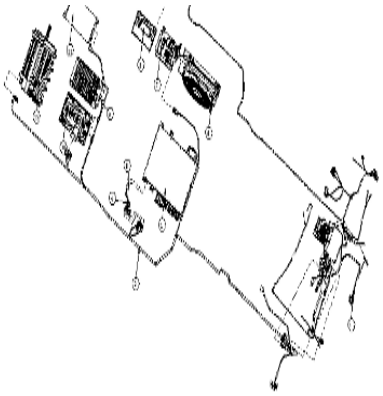

2	1001040601740650	Controller wiring (AC+ABS+MOTOR CONTROLLER)	1
3	1001040301140110	high voltage control box (two-pack three-dimensional non-heating)	1
4	1001040601740140	Charging signal line	
5	1001040601740260	Low power &Communication line	1
6	1001040401070020	Air conditioning condenser	1
7	1001040401100000	Integrated air-conditioning compressor	1
8	1001020301200010	36ah start battery	1
9	1001040905120030	1KW DC/DC Converter	1
10	1001040301160010	Motor Controller	1
11	1001040905160010	3.3KW Charger	1
12	1001020301160020	Motor	1

Low-voltage wiring harness

NO.	Part No.	Description	QTY/car
1	1001040601740650	Controller wiring (AC+ABS+MOTOR CONTROLLER)	1
2	1001040601800160	Main harness of the cab (AC+ ABS+ waterproof EPS)	1
3	1001040601740290	Connect wiring harness assembly	1
4	1001020301200010	36ah start battery	1
5	1001040804010010	Direction Indicator Lights Front	2
6	1001040801030010	Front headlamp 3c standard	2
7	1001040301130060	Three-in-one control board	1
~~8~~	~~1001040102030010~~	~~HOMER3（only china market）~~	~~1~~
9	1001040401130010	Air conditioning Evaporator with ptc	1
10	1001040401080060	Air conditioning control panel	1
11	1001040101020020	instrument	1
12	1001040502020010	Loudspeaker	2
13	1001040806020010	reading light	1
14	1001040503020010	GPS+GSM combination line	1
15	1001050203720010	Electric door lock	1
16	1001040904020010	Headlight Switch	1
17	1001040904010010	Wiper switch	1
18	1001040904040010	Warning light switch	1
19	1001040501010030	MP5 Player	1

Accelerator pedal

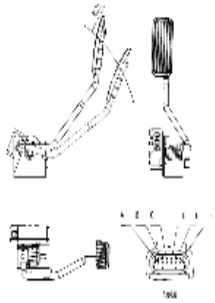

NO.	Part No.	Description	QTY/car
1	1001040904100010	Accelerator pedal	1

Starting battery system

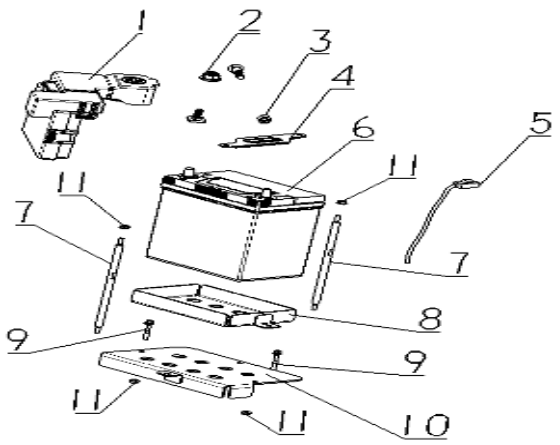

NO.	Part No.	Description	QTY/car
1	1001050204990110	Five-way fuse box	1
2	1001050104020280	Hexagonal flange locking nut with non-metallic inserts	1
3	1001050104020040	Type 2 hexagonal locking nut with non-metallic inserts	1
4	1001020301190050	Start Battery Pressure Plate	1
5	1001040601740530	Negative Battery Bolt	1
6	1001020301200010	36ah Start battery	1
7	1001020301190030_01	Start Battery Lock Rod	2
8	1001020301190020_02	Start battery bracket	1
9	1001050104010550	Hexagonal flange bolt	2
10	1001020301210030	Start Battery Transition Plate	1
11	1001050104020070	hexagonal flange nut	4

Left door lock control tieline

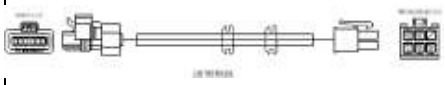

NO.	Part No.	Description	QTY/car
1	1001040601060010	Left door lock control tieline	1

Right door lock control tieline

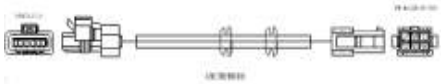

NO.	Part No.	Description	QTY/car
1	1001040601070010	Right door lock control tieline	1

High-voltage warning sign

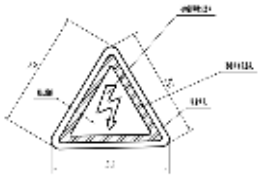

NO.	Part No.	Description	QTY/car
1	1001030402040020	High-voltage warning sign	1

Accelerator pedal tieline

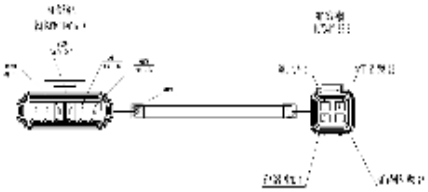

NO.	Part No.	Description	QTY/car
1	1001040601740270	Accelerator pedal tieline	1

Door lock control tieline

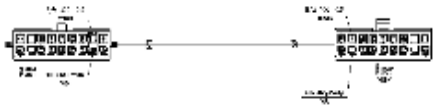

NO.	Part No.	Description	QTY/car
1	1001040601740340	Door lock control tieline	1

Triangle warning sign

NO.	Part No.	Description	QTY/car
1	1001030402050020	Triangle warning sign	1

MP5 Video transmission cable

	NO.	Part No.	Description	QTY/car
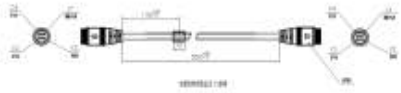	1	1001040601250020	MP5 Video transmission cable	1